THIRD ANGLE PROJECTION

CHANGES

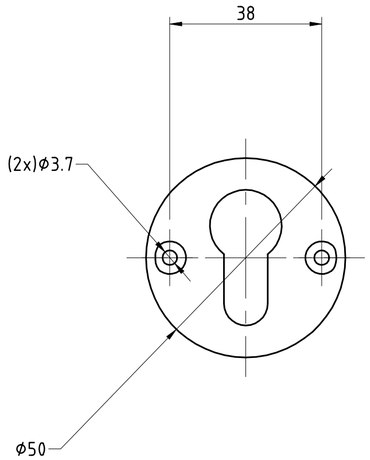

FACE FIX 2x 3.5 x 25 CSK TORX PIN WOODSCREWS

BACK TO BACK 2x M3.5 x 80 TORX PIN MACHINE SCREWS

Iss	Date	Alt.N°
A	02/14	

DRN.

CHKD. P.C.

SCALE 1:1

DO NOT SCALE

----------DORTREND---------- owns the copyright of this drawing which is supplied in confidence. It must not be used for any purpose other than that for which it is supplied and must not be copied or disclosed (in whole or in part) without DORTREND written permission.
Any copies of this drawing made by any method must also include a copy of this legend.

UNLESS OTHERWISE STATED, ASSUME :-
TOLS. NO DECIMAL PLACE ± 0,5mm. 1 DECIMAL PLACE ± 0,1mm.
ANGULAR TOLS. ±1/2°. GEOMETRIC TOLS. SEE B.S. 308 METRIC.
ISO METRIC COARSE THREADS. MEDIUM FIT 6H / 6g.
BREAK ALL CORNERS AND SHARP EDGES.

THIS DRAWING MAY ONLY BE ALTERED IF THE PART REMAINS INTERCHANGEABLE. IF NOT INTERCHANGEABLE A NEW DRAWING NUMBER MUST BE TAKEN.

MATL.

SPEC.

FINISH.

TITLE. **PROFILE ESCUTCHEON 50 DIAM**

DRG. N°. **DT - ANT350**

DORTREND Int Ltd.—STOURPORT ON SEVERN—ENGLAND

A2